Precision Forged Spiral Bevel Gears

CAD/CAM Technique Makes It Practical

by
Aly Badawy
P. S. Raghupathi
(Batelle's Columbus Laboratories)

Gary Horvat
(Eaton Corporation)
Don Ostberg
(U.S. Army Tank Automotive Command)

Close tolerance forging of U.S. Army spiral bevel gears, requiring only a single finish machining operation (or none), now is feasible in production with the help of a newly developed Computer Aided Design and Manufacturing (CAD/CAM) technique. This method of manufacture offers many advantages because it reduces material losses and machining costs while increasing the fatigue life of the gears by 30 percent.

A recent U.S. Army Tank-Automotive Command project, conducted by Battelle's Columbus Laboratories, successfully developed the methodology of CAD/CAM procedures for manufacturing dies (via EDM) for forging spiral bevel gears. Further, it demonstrated that precision forging of spiral bevel gears is a practical production technique. Although no detailed economic evaluation was made in this study, it is expected that precision forging offers an attractive alternative to the costly gear cutting operations for producing spiral bevel gears.

CAD and CAM Integrated

In industrial practice, attempts are continuously made to introduce improved manufacturing methods to reduce production and life cycle costs. Close tolerance forging of spiral bevel gears—requiring only a single or no finish machining

---

AUTHORS:

DR. ALY BADAWY *is Principal Research Scientist, Engineering and Manufacturing Technology Department for Battelle's Columbus Laboratories. His experience covers research and development in Marine Engineering and Naval Architecture, Applications of Optimization Theory in Design, Computer Aided Design and Interactive Computer Graphics, and Geometrical Modeling of Sculptured and Complex Surfaces. Dr. Badawy has authored or co-authored 15 technical papers related to Computer Aided Design and Computer Graphics. He holds a B. Sc. from Alexandria University, and a M. Eng. and a Ph. D. from McMaster University, Canada. Additionally, he is a member of the American Society of Mechanical Engineers, Computer Aided Design Committee.*

DR. P. S. RAGHUPATHI'S *experience is in the area of cold extrusion, closed die forging, deep drawing, metal forming machine tools and computer aided design and manufacturing. He is currently the Associate Manager, Metalworking Section of Battelle's Columbus Laboratories. In addition to being the author/co-author of more than 20 publications, he is also a co-editor of a Metal Forming Handbook which is soon to be published. Dr. Raghupathi holds a B. E., University of Madras, India, M. E. from Indian Institute of Science, and a Dr. Ing. from the University of Stuttgart, W. Germany. As a member of the International Cold Forging Group based in Europe, he maintains close contact with European Universities, research laboratories and companies active in manufacturing technology.*

MR. GARY L. HORVAT *has been employed at Eaton Corporation since 1977. His work in Forging and Forging Development at various Eaton Divisions has given him a unique background in the precision forging of gears. Currently, Mr. Horvat is a Manufacturing Development Engineer. He attended Cleveland State University, graduating with a B. and M.S. Industrial Engineering. He is a member of American Society for Metals, Society of Manufacturing Engineering, CASA, Computer and Automated Systems Association of S.M.E.*

MR. DON OSTBERG *is currently a Materials Engineer for the United States Army Tank Automotive Command. He has been at TACOM since June 1977. During this time he has been involved in the manufacturing technology efforts. Mr. Ostberg studied at Cleveland State University and holds a BA in Chemical Engineering.*

operation—offers considerable advantage over machining, because this method of manufacture (1) reduces material losses and machining costs and (2) increases the fatigue life of gears up to 30 percent.

A few companies around the world are able to produce spiral bevel gears by precision forging. However, the development of the process for each new gear design requires considerable trial and error. Thus, application of computer techniques to the design and manufacture (CAD/CAM) of the gear forging dies represents an attractive alternative. Therefore, in this program, methods were developed to apply existing advanced computer aided design and manufacturing (CAD/CAM) technology (finite element, metal forming, and heat transfer analysis) to gear forging die design and manufacture. Gear forging dies were designed and manufactured according to the data supplied by the output of the CAD procedure; thus, the CAD and CAM processes were integrated. The results of the CAD/CAM techniques were evaluated for a given spiral bevel gear/pinion set by designing and manufacturing the forging dies via CAD/CAM.

In recent years, CAD/CAM techniques have been applied to die design and manufacture for forging rib-web type aircraft structural parts, track shoes for military vehicles, and precision turbine and compressor blades. The experience gained in all these applications indicates that a certain overall methodology is necessary for CAD/CAM of dies for precision and/or near net shape forging. This approach indicates that the necessary inputs to the CAD/CAM system are: geometric description of the forging, data on billet material under forging conditions (billet and die temperatures and rate and amount of deformation), friction coefficient, to quantify the friction shear stress at material and die interface, and forging conditions (i.e., temperatures, deformation rates, die lubricants, method of heating the billets, and suggested number of forging operations).

With these input data, a preliminary design of the finish forging die can be made. Next, stresses necessary to finish forge the part and temperatures in the forging and the dies are calculated. The temperature calculations take into account the heat generated due to deformation and friction, and the heat transfer during the contact between the hot forging and the cooler dies. Thus, the elastic die deflections, due to temperatures and stresses, can be estimated and used to predict the small corrections necessary on the finish die geometry. The estimation of die geometry corrections is necessary for obtaining close tolerance forgings and for machining the finish dies to the exact dimensions.

The overall procedure described above has been applied to CAD/CAM of spiral bevel gears as Phase I of this project.

The second part of the project (Phase II) involved Computer Aided Manufacturing (CAM) of the forging dies (from rough billet) and demonstration of the effectiveness of CAD/CAM by forging 20 spiral bevel gear sets. Phase III—Application of CAD/CAM techniques to actual production of bevel gears (spiral or straight)—has not yet started.

Five Tasks Carried Out

Five separate tasks were carried out under Phase I of the work: preform design, tool design, manufacturing of forging dies, forging trials, and finishing and dimensional checking of forged gears.

One of the most important aspects of the forging process is the proper design of preforming (or blocking) operations. The following features were considered in the design of the preform of the spiral bevel gear considered in this project.

Assure Defect Free Metal Flow and Adequate Die Filling. Adequate metal distribution is necessary in the blocker design to avoid forging defects, such as cold shuts and folds. The preform was designed as a solid ring (no teeth) with the outer dimensions as close as possible to the outer dimensions of the finished gear. This minimizes the amount of material to be moved during forging, and this in turn, enhances die filling.

Minimize the Material Lost in the Flash. In steel forgings, approximately half of the cost of forging consists of material

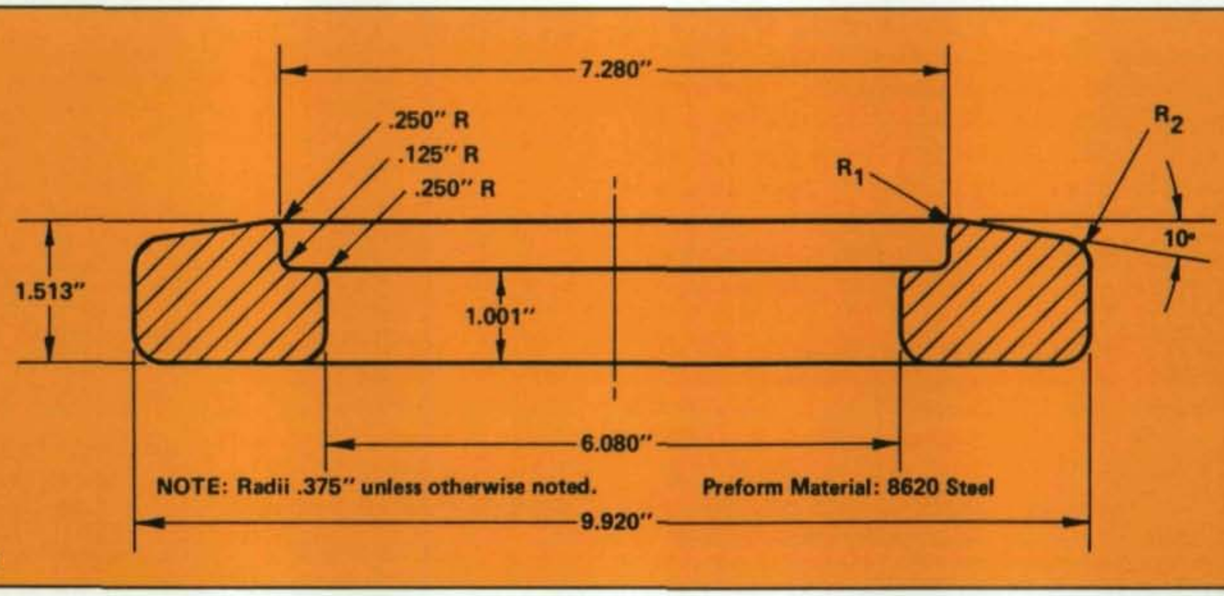

NOTE: Radii .375" unless otherwise noted.

Preform Material: 8620 Steel

Figure 1

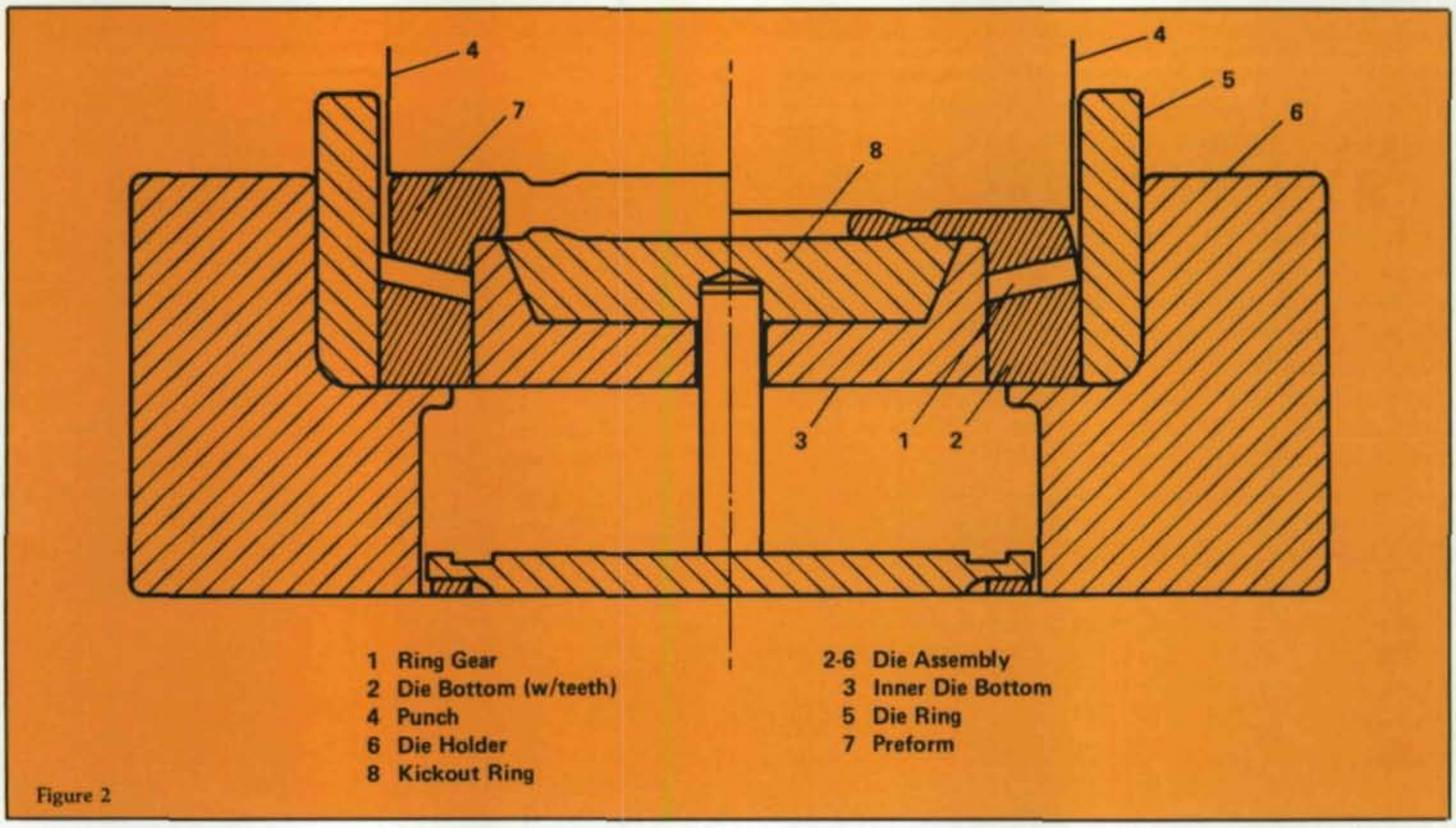

Figure 2

costs. On the average, 30 percent of the incoming forging stock is lost in the form of flash. Thus, approximately 15 percent of the forging costs are in the flash material of relatively little recoverable scrap value. The design of the blocker of the gear produced no flash. This was because the volume (or weight) of the preform was slightly larger than the volume of the finish gear, and that the proper material distribution throughout the preform volume was achieved.

Centering of Preform in Die. The preform was designed as a pancake with its center lying exactly on the center of the die. This was thought to insure even filling of the die cavity.

With the above considerations, an initial preform design was developed as shown in Fig. 1. Fig. 2 shows the preform positioned in the die. As discussed later, a subsequent preform was designed and used in the forging trials. The new design shown in Fig. 3 was wider, so that the metal would not have to move very far to fill the cavity. The size of the corner radii was also reduced to provide more material at the corners. The billet material, that was used for forging spiral bevel gears, was cut from bar stock. The billet was upset to form a pancake having the proper diameter. The pancake was subsequently machined to the dimensions specified for the preforms.

Tool Design

The forge tooling was designed by using the results of Phase I of this project. The die assembly is a two piece design. The die insert, with the teeth, is one piece with a die ring around the insert to form the outer diameter of the forging. At the center of the die is the die insert and the center kickout. The insert forms the inner diameter of the forging, while the kickout removes the gear from the die after forging. The kickout is designed to lift the part by pushing on the center flange of the gear. It is activated by a mechanical kickout mechanism of the forge press which raises during the upstroke of the press. The kickout is, also, designed to contact the preform in such a way as to minimize the amount of material that is moved across the face of the insert. Fig. 2 shows the kickout system.

The tooling assembly is shown in Fig. 4. Incorporated in the forging design is the straight sided outer diameter with the provision of flashing toward the inner diameter. The inner diameter allows a 3/8 inch flash thickness on each side to trap the material. Inside the flash land is a gutter for excessive material to flow.

The punch holder design is different from the die holder in that it has a solid punch without any kickout. The punch also has provisions for placing spacers, or shims, between the punch and punch holder to vary the forging and flash thickness. This is necessary because it was decided to conduct the forging trials on a press, which has a fixed bolster, with no wedge adjustment. The shims help to adjust the forging thickness, and the die fill, within certain limits. The components of the die tooling setup are shown in Fig. 4. The assembled tooling is shown in Figs. 5 and 6.

Manufacture of Forging Dies

Precision manufacture of forging dies plays an important role in the success of precision forging of spiral bevel gears. The use of sound die manufacturing methods is essential, if the required gear precision is to be achieved.

Based on the results of Phase I of this project, it was decided to use the hot work steel, H-11, as a die material for the near net gear forging trials, and the hot work steel, H-13, as a die material for the net gear forging trials. The billet material used in both trials was 8620 steel. The die blanks were heat treated and then machined prior to the EDM of tooth cavities. The EDM electrodes were machined on a conventional gear cutting machine, using machine settings supplied by the CAD Computer Program SPBEVL of Phase I.

The electrode geometry accommodated all the corrections (elastic deflection due to loading, temperature differentials, and bulk shrinkage), as described eariler. The gear impression on the die was obtained by EDM. The EDM operation was performed using six electrodes in sequence. Each subsequent electrode was burned deeper until the required depth was obtained. Important steps in the manufacture of the forging dies included preparation of the electrode, EDM burning of the die, and the final grinding of the die after EDM.

It is worth mentioning here that this task (Manufacture of Forging Dies) makes use of all the data supplied from the Phase I part of this project; hence, integration of the Computer Aided Design (CAD) with the Computer Aided Manufacturing (CAM) was achieved in the production of forged spiral bevel gears.

Forging Trials

After manufacturing the dies with the required precision, as described earlier, the gear forging trials were conducted at Eaton Corporation's Forging Division in Marion, Ohio. A 3,000 ton mechanical forging press manufactured by National Machinery Company, Tiffin, Ohio, was used to perform the trials. The press was selected based upon the anticipated forging load of about 2,500 tons and the space available for the tooling.

Three series of forging trials were conducted. During the first series, the technological details of the forging procedure such as heating, lubrication, part transfer, and cooling were established. During the second series of trials, 20 gears were produced with gear teeth forged to near net dimensions. These gears subsequently were machined with a single machining operation. In the third series of trials, 20 spiral bevel gears were forged with net teeth dimensions. Thus, the gear-pinion sets were obtained by machining only the back side of the forged gears, and by machining the matching pinions.

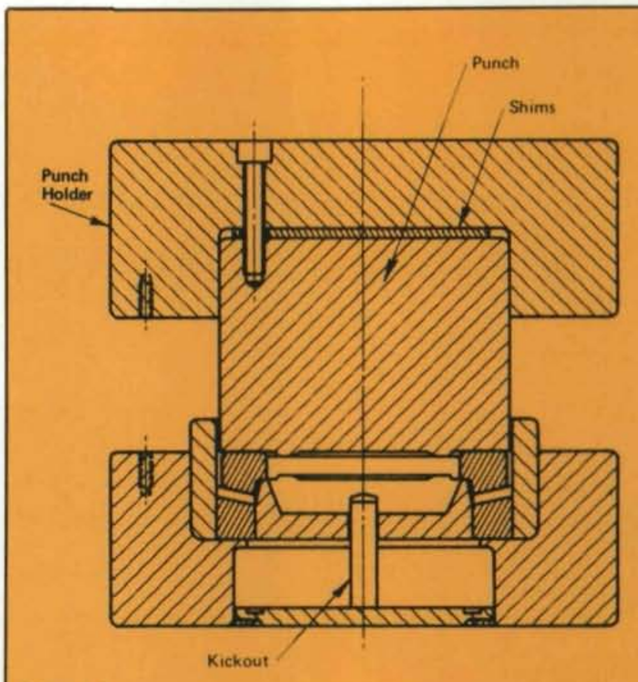

Figure 4

The forging loads were monitored using load transducers attached to the frame of the press. These strain gage devices sense the strain in the frame of the press during forging, and generate an electrical signal that is proportional to the load.

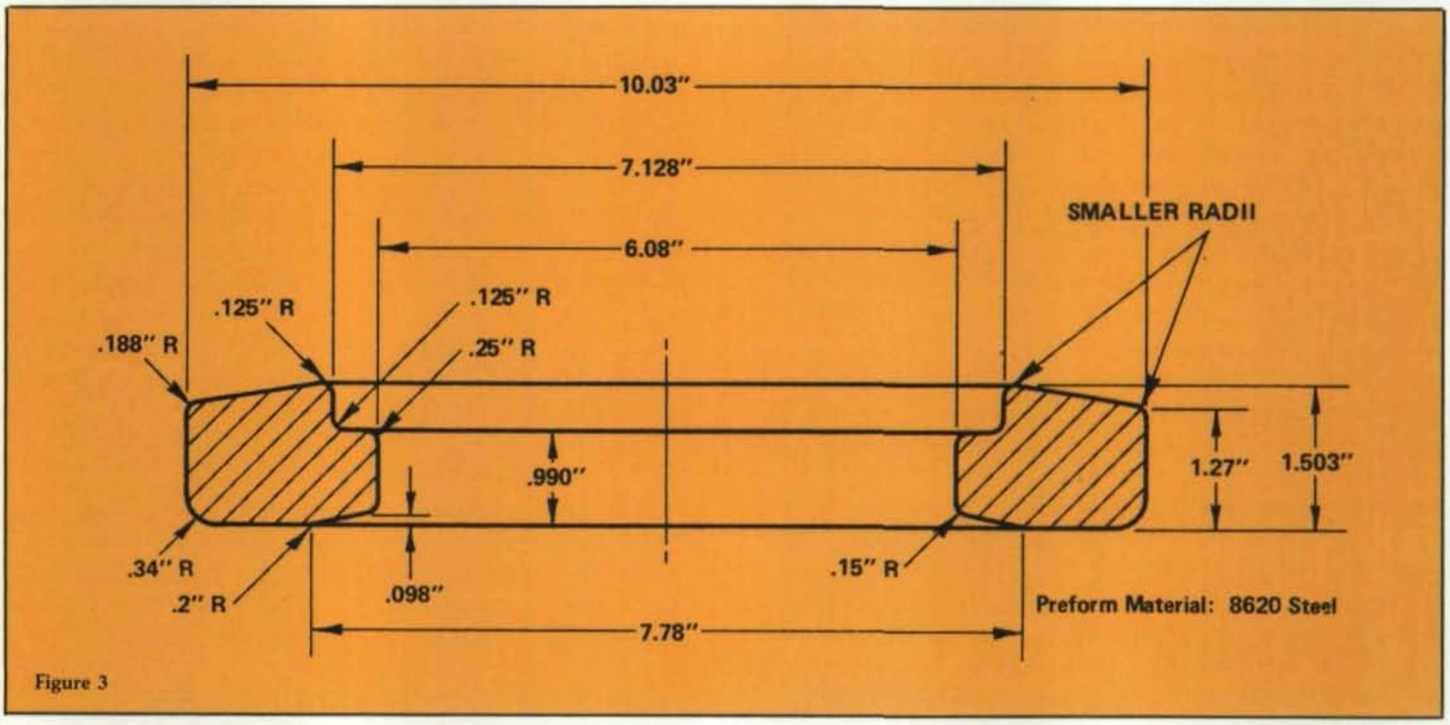

Figure 3

Figure 5

Once the transducer system has been calibrated, the electrical signal can be read directly as load on the digital readout device. The system used was a Model LG-ll, designed and built by Helms Instrument Company.

The die lubrication used during the forging trials consisted primarily of a water base graphite material sprayed with pressurized air. A hand wand was used to direct the lubricant onto the die. Several billets were coated with a graphite based coated material to reduce oxidation during heating, and improve lubrication during forging. However, no advantage was noted in surface finish, die fill, or forging load. The practice was discontinued after the initially coated billets were used.

After forging, the gears were placed, teeth down, in a sand-graphite mixture to reduce oxidation of the teeth during cooling. The back surfaces of the gears were still exposed to air, so that the cooling rate would not be excessively slow.

Results of Forging Trials

During the first set of trials, a gas furnace was used to heat the preforms. This resulted in excessive scale formation and poor surface finish of the forged gear teeth. The heating was done by induction in the subsequent trials. The outside diameter of the preforms was considerably smaller than the internal diameter of the die cavity. As a result, some preforms could not be centered accurately and the forged teeth configurations were not uniform.

The second set of trials was considered very successful for the following reasons. First, the forged gear was uniform. All teeth looked almost alike. This meant that the centering problem encountered during the first forging trials was eliminated. Second, the surface quality of the forged gear teeth was excellent. The induction heating of the preforms produced forgings with minimal scale. That meant that the scale problems, encountered during the first forgings trials, where a gas furnace was used to heat the billets, were eliminated.

However, two problems were encountered during the second series of forging trials: (1) There was incomplete filling at the toe and heel of the tooth. This problem was due mainly to the preform design. The radii at the outer and inner part of the ring are generous; consequently, there was not enough material at these parts to completely fill the die cavity. (2) Non-uniform temperature of the billet was noticed due to the change in colors in the inner part of the ring (cooler) and the outer part of the ring (hotter, i.e., the red color was brighter). This problem could be solved later by trying different heating cycles and times and lower induction frequency to obtain a uniform preform temperature.

The next forging trials (third set) were successful in producing gears with excellent surface quality and with superior die fill, as compared to near net forging trials. The new preform design used in this trial was the main reasons for the better fill in the toe and heel of the gear. As shown in Fig. 3, the preform has a smaller radii in the toe and heel of the gear, compared with the near net preform. This additional material in the toe and heel enhanced the filling of those parts.

Dimensional Checking of Forged Gears

The forged gears were checked for dimensional accuracy on the Zeiss machine. The Zeiss machine is a computer controlled coordinate measuring machine (manufactured by Zeiss Corporation in West Germany) which produces plots of the tooth form variation as compared to the tooth surface of the cut master gear, produced by conventional cutting on a Gleason generator.

(Continued on page 48)

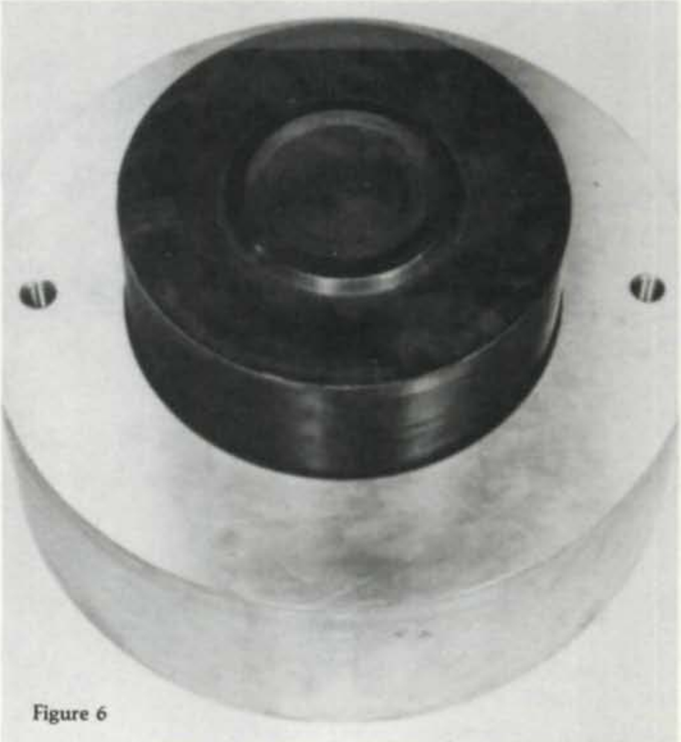

Figure 6

Spiral Bevel Gears

(Continued from page 13)

Figure 7

Fig. 7 shows one of the forged gears being measured on the Zeiss machine. The plots show the relative deviation of the forged tooth profile as compared to a "master gear" tooth produced by conventional cutting (using a Gleason generator). Note that the relative error at the center of the profile is zero; i.e., the variations were measured relative to the center of the coast and drive surface of the master gear. The maximum variation was 0.003 inch (0.0762 mm). This difference can be compensated for easily in the cutting of the matching pinion.

Economics Attractive

The main goal of this program is to demonstrate that the close tolerance forging process, combined with CAD/CAM, is an attractive and economical method for manufacturing spiral bevel gears. To achieve this goal, the use of advanced CAD/CAM techniques to design and manufacture the forging dies was necessary. The project was successful in that it:

- Developed the details of CAD/CAM for making the forging dies
- Forged gears with near net and net teeth surfaces
- Demonstrated the practicality and economics of precision forging spiral bevel gears.

It is expected that the techniques demonstrated by this project can be used for manufacturing spiral bevel gears (on a production basis) by forging. The matching pinions are to be manufactured conventionally by gear cutting. Thus, by eliminating the tooth cutting process for the gears, which represents the costliest operation in producing matching gear-pinion sets, considerable savings in manufacturing costs can be expected. In addition, existing data on forged bevel gears illustrate that forged gears are superior, in terms of fatigue life and load carrying capability, to cut gears. Consequently, a similar improvement in performance can also be expected from forged spiral bevel gears.

This article is based on work conducted by a team of engineers. The authors gratefully acknowledge the contribution of Dr. T. Altan, Battelle's Columbus Laboratories, and Mr. J. Chevalier, of U.S. Army Tank Command, Messrs. A. Sabroff and Mr. J. R. Douglas, from Eaton Corporation.

This article was reprinted from the U.S. Army's ManTech-Journal, Volume 8/Number 4/1983.

CIRCLE E-1 ON READER REPLY CARD